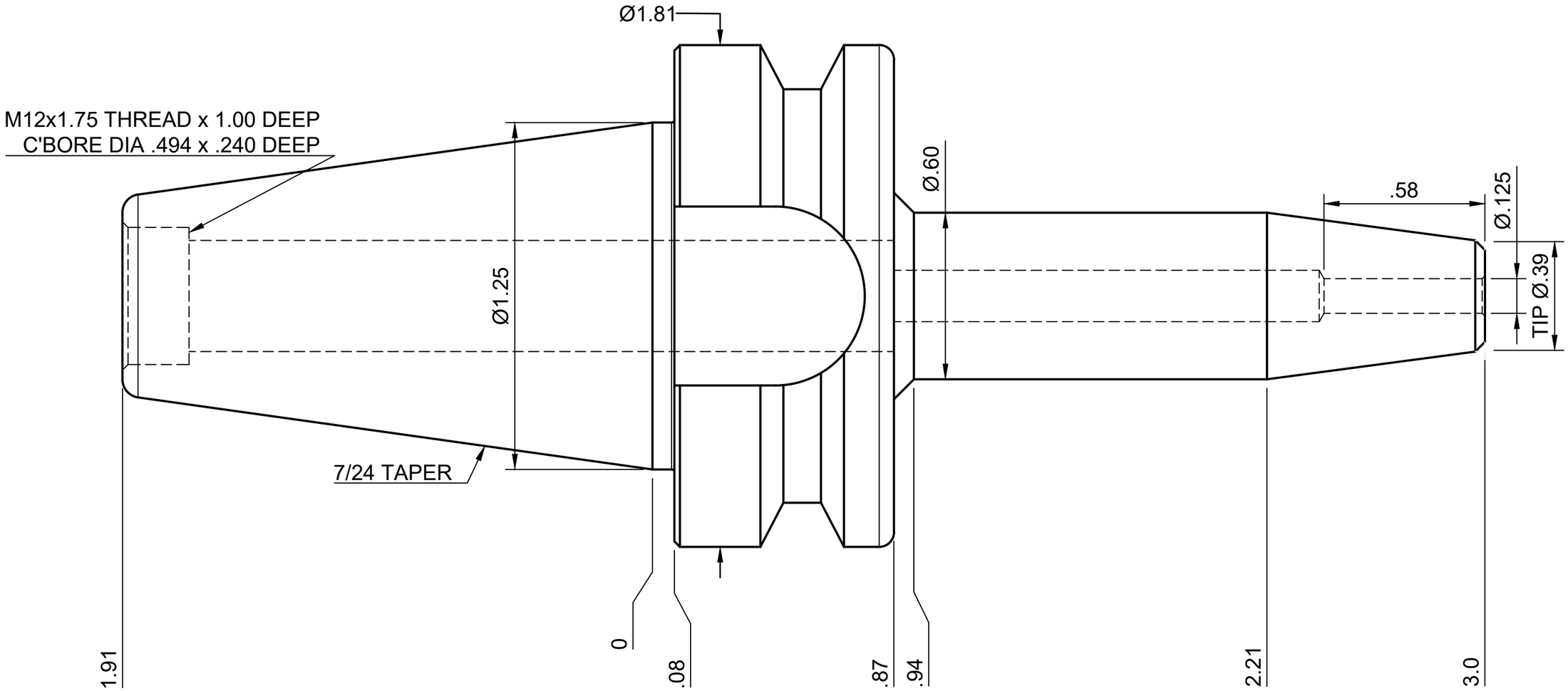

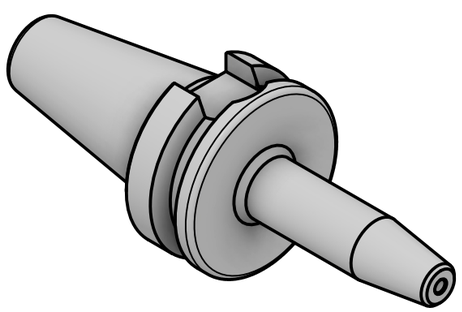

NOTES:
ACCEPTS 0.125 SHANK TOOLING
FOR MORE PRODUCT DETAILS PLEASE GO TO MARITOOL.COM
AND SEARCH ITEM # LISTED ON THIS PRINT

MARITOOL

www.maritool.com

ITEM# **BT30-SF.125-3.0**

Made In USA / Drawn By FM